Texas Department of Motor Vehicles
Business Unit # 60800
Purchase Order # 0000004130

Payment Terms: **NET30** Freight Terms: **FOB Destination** Ship Via: **VNDR** PCC: **0** Date: **06/23/17** PO Method: **DG** Dispatch: **Dispatch Via Print** Rev Dt:

PLEASE NOTE: ADDITIONAL TERMS AND CONDITIONS MAY BE LISTED AT THE END OF THE PURCHASE ORDER.

Vendor: TEXAS DEPARTMENT OF CRIMINAL JUSTICE (TD
PO BOX 99
HUNTSVILLE TX 773420099
United States

Ship To: SEEBELOW - See Below for Shipping
See Below for Delivery Information
TX
United States

Bill To: 4000 Jackson Avenue
Austin TX 78731
United States

Vendor ID: 3696696696 6

Purchaser: Rhonda Lee Gips
Phone: 512/465-4199
Fax: 512/465-5641
Email: Rhonda.Gips@txdmv.gov

Fax:
Email: DMV_FIN-INVOICES@TxDMV.gov

PO Information:

The Prison Made Good Acts:
Texas Department of Criminal Justice (TDCJ) and Texas Correctional Industries (TCI), a division of the TDCJ, Texas Government Code, Title 10, Subtitle D, Chapter 2155, Subchapter A, Sec. 2155.065 and Texas Government Code, Title 4, Subtitle G, Chapter 497, Subchapter A, Section 497.023 - 497.029)
.
Change Orders:
Change orders will be allowed only if unforeseen conditions arise such as, but not limited to, increasing or decreasing quantities or if the department needs dictate changes. All changes shall be in the scope of original work. No verbal change orders shall be permitted. All change orders must be in writing with a Purchase Order Change Notice (POCN) issued by TxDMV Purchasing Section.
.
Payment:
Payment will be made in accordance with the Texas Prompt Payment Act, TGC, Subtitle F, Chapter 2251. Vendor shall submit one copy of a correct itemized invoice showing the purchase order number, payee ID., remit to address, and phone number on invoice. Vendors may submit an electronic invoice. All electronic invoices shall be sent to DMV_FIN-INVOICES@TxDMV.gov (note: There is an underscore "_" between DMV and FIN). All invoices received at the email address will be filed for future reference and you will receive a receipt confirmation email. To avoid the confusion of duplicate invoices, please do not send other copies of this invoice via regular mail, fax or other means. On emails for electronic invoices, include the company name (as it appears on the invoice) and the purchase order number in the subject line to assist in identifying and processing your invoices in a timely manner. TxDMV will not incur any penalty for late payment if payment is made in 30 days or less from receipt of goods or services and a correct invoice, whichever is later.

Note: Warrants will not be issued to a vendor without a current Texas Identification Number.
.
TxDMV Contact:
Ann Pierce - 512-465-4100 or Ann.Pierce@TxDMV.gov
Dawn McNabb - 512-465-1262 or Dawn.McNabb@TxDMV.gov

Vendor Contact:
Tonya Rodger - 936-293-4117 or Tonya.Rodger@tdcj.texas.gov

Authorized Signature

Rhonda Gips, CTPM

06/23/2017

Texas Department of Motor Vehicles
Business Unit # 60800
Purchase Order # 0000004130

Line-Sch	Line Description	Class/Item	Quantity	UOM	Unit Price	Extended Amt	Due Date
1- 1	Modular Workstations for Motor Carriers Division Texas Department of Motor Vehicles 3712 Jackson Avenue Bldg 6, 5th Floor Austin, TX Per Attached Drawings and Quote 17DMV191 97 - Modular Workstations Installation date: Early November 2017	425/54	1.0000	LOT	$447,495.00000	$447,495.00	12/31/2017

Schedule Total $447,495.00

ReqID:
0000004752

Fabric to be determined
Laminate to be determined

Item Total for Line # 1 $447,495.00

Total PO Amount $447,495.00

All Shipments, Shipping papers, invoices and correspondence must be identified with our Purchase Order Number. Over shipments will not be accepted unless authorized by Purchaser prior to Shipment.

Texas Department of Motor Vehicles Standard Terms and Conditions can be found at: http://www.txdmv.gov/contractors-vendors

Authorized Signature

Rhonda Gipson, CTPM

06/23/2017

Sales Quote Summary

Project	17DMV191	***Order Number***	
Description 1	DEPT OF MOTOR VEHICLE CH6 5TH FLR		
Description 2	CAMP HUBBARD, BLDG 6, 5TH FLR, AUSTIN		
Status	REVISION 3	***Workstations***	97
Designer	KLS	***Project Date***	3/17/2017
CAD	LM	***Revised***	5/22/2017 1:06:47 PM

PRODUCT GROUP	***QUANTITY***	***EXTENDED***
PANELS AND ACOUSTICAL TILES	528	$172,653.00
PANEL TRIM AND INTERSECTION CONDITIONS	423	$6,781.00
DOORS	10	$3,000.00
ELECTRICAL	1024	$38,713.00
WORKSURFACES	425	$32,906.00
ACCESSORIES	938	$33,563.00
OVERHEAD STORAGE COMPONENTS	364	$3,640.00
FILING & STORAGE	767	$59,136.00
TABLES	2	$720.00
DESKS AND WORKSURFACES	21	$7,569.00
OVERHEADS/STORAGE	261	$50,615.00
PRIVACY SCREENS	7	$1,348.00

TOTALS

PRODUCT SUBTOTAL	410,644.00
2.5% INSTALLATION	10,266.00
98540 lb. @ $0.25 / lb. FREIGHT	24,635.00
390 key cores @ $5.00/each KEYALIKE	1,950.00
GRAND TOTAL	**447,495.00**

Fab #1 TBD Fabric to be determined Color #1 XX To Be Determined

Lam #1 TBD Laminate To Be Determined

Revisions

5/8/2017 REVISED PER E-MAIL REQUEST
5/17/2017 ADDED 12 STATIONS AS REQUESTED
5/22/2017 WENT BACK TO 2ND PROPOSAL, AND REMOVED 3 STATIONS.

Comments:

Project 17DMV191
Description DEPT OF MOTOR VEHICLE CH6 5TH FLR
Status REVISION 3
Designer KLS
CAD LM

Order Number
Workstations 97
Project Date 3/17/2017
Revised 5/22/2017 1:06:47 PM

Model Number	*Fabric*	*Trim*	*Laminate*	*Quantity*	*Price*	*Extended*
PANELS AND ACOUSTICAL TILES						
CI-CGFP-2480-TN HALF GLS/HALF FAB PNL TN 24X80	TBD	XX		5	$358.00	$1,790.00
CI-CP-2432-TN FABRIC ACOUSTICAL PNL TN 24X32	TBD	XX		1	$200.00	$200.00
CI-CP-2442-T6 FABRIC ACOUSTICAL PNL T6 24X42	TBD	XX		4	$269.00	$1,076.00
CI-CP-2466-T6 FABRIC ACOUSTICAL PNL T6 24X66	TBD	XX		1	$302.00	$302.00
CI-CP-2466-TN FABRIC ACOUSTICAL PNL TN 24X66	TBD	XX		110	$252.00	$27,720.00
CI-CP-2480-T6 FABRIC ACOUSTICAL PNL T6 24X80	TBD	XX		3	$327.00	$981.00
CI-CP-2480-TN FABRIC ACOUSTICAL PNL TN 24X80	TBD	XX		8	$277.00	$2,216.00
CI-CP-3042-T6 FABRIC ACOUSTICAL PNL T6 30X42	TBD	XX		4	$278.00	$1,112.00
CI-CP-3080-TN FABRIC ACOUSTICAL PNL TN 30X80	TBD	XX		5	$314.00	$1,570.00
CI-CP-3632-TN FABRIC ACOUSTICAL PNL TN 36X32	TBD	XX		1	$223.00	$223.00
CI-CP-3642-T6 FABRIC ACOUSTICAL PNL T6 36X42	TBD	XX		9	$292.00	$2,628.00
CI-CP-3666-T6 FABRIC ACOUSTICAL PNL T6 36X66	TBD	XX		154	$334.00	$51,436.00
CI-CP-3666-TN FABRIC ACOUSTICAL PNL TN 36X66	TBD	XX		53	$284.00	$15,052.00
CI-CP-3680-T6 FABRIC ACOUSTICAL PNL T6 36X80	TBD	XX		36	$380.00	$13,680.00
CI-CP-3680-TN FABRIC ACOUSTICAL PNL TN 36X80	TBD	XX		9	$330.00	$2,970.00
CI-CP-4242-T6 FABRIC ACOUSTICAL PNL T6 42X42	TBD	XX		2	$311.00	$622.00
CI-CP-4242-TN FABRIC ACOUSTICAL PNL TN 42X42	TBD	XX		2	$261.00	$522.00
CI-CP-4266-T6 FABRIC ACOUSTICAL PNL T6 42X66	TBD	XX		1	$358.00	$358.00
CI-CP-4266-TN FABRIC ACOUSTICAL PNL TN 42X66	TBD	XX		4	$308.00	$1,232.00
CI-CP-4280-T6 FABRIC ACOUSTICAL PNL T6 42X80	TBD	XX		10	$401.00	$4,010.00
CI-CP-4280-TN FABRIC ACOUSTICAL PNL TN 42X80	TBD	XX		2	$351.00	$702.00
CI-CP-4842-T6 FABRIC ACOUSTICAL PNL T6 48X42	TBD	XX		1	$321.00	$321.00
CI-CP-4866-T6 FABRIC ACOUSTICAL PNL T6 48X66	TBD	XX		1	$376.00	$376.00

Project	17DMV191	***Order Number***	
Description	DEPT OF MOTOR VEHICLE CH6 5TH FLR		
Status	REVISION 3	***Workstations***	97
Designer	KLS	***Project Date***	3/17/2017
CAD	LM	***Revised***	5/22/2017 1:06:47 PM

Model Number	*Fabric*	*Trim*	*Laminate*	*Quantity*	*Price*	*Extended*
PANELS AND ACOUSTICAL TILES						
CI-CP-4880-T6 FABRIC ACOUSTICAL PNL T6 48X80	TBD	XX		4	$418.00	$1,672.00
CI-CP-4880-TN FABRIC ACOUSTICAL PNL TN 48X80	TBD	XX		1	$368.00	$368.00
CI-CP-6042-T6 FABRIC ACOUSTICAL PNL T6 60X42	TBD	XX		9	$340.00	$3,060.00
CI-CP-6066-T6 FABRIC ACOUSTICAL PNL T6 60X66	TBD	XX		61	$406.00	$24,766.00
CI-CP-6080-T6 FABRIC ACOUSTICAL PNL T6 60X80	TBD	XX		21	$444.00	$9,324.00
CI-CP-6080-TN FABRIC ACOUSTICAL PNL TN 60X80	TBD	XX		6	$394.00	$2,364.00
				528		*$172,653.00*
PANEL TRIM AND INTERSECTION CONDITIONS						
CI-CAC-32 CORNER POST 32"	TBD	XX		1	$15.00	$15.00
CI-CAC-42 CORNER POST 42"	TBD	XX		7	$17.00	$119.00
CI-CAC-66 CORNER POST 66"	TBD	XX		82	$21.00	$1,722.00
CI-CAC-80 CORNER POST 80"	TBD	XX		21	$23.00	$483.00
CI-CTC-42 T-POST 42"	TBD	XX		10	$15.00	$150.00
CI-CTC-66 T-POST 66"	TBD	XX		36	$19.00	$684.00
CI-CTC-80 T-POST 80"	TBD	XX		18	$21.00	$378.00
CI-CTCS-80 CTC SPACER 80"	TBD	XX		1	$66.00	$66.00
CI-ECP-32 END OF RUN 32"		XX		1	$7.00	$7.00
CI-ECP-66 END OF RUN 66"		XX		110	$12.00	$1,320.00
CI-ECP-80 END OF RUN 80"		XX		7	$14.00	$98.00
CI-ECPL-3242 VARIBL HEIGHT END OF RUN 32X42		XX		1	$6.00	$6.00
CI-ECPL-4266 VARIBL HEIGHT END OF RUN 42X66		XX		19	$7.00	$133.00
CI-ECPL-4280 VARIBL HEIGHT END OF RUN 42X80		XX		6	$8.00	$48.00
CI-ECPL-6680 VARIBL HEIGHT END OF RUN 66X80		XX		11	$8.00	$88.00
CI-FECPC-4266 VARIABLE HEIGHT CORNER POST	TBD	XX		1	$15.00	$15.00

Project 17DMV191
Description DEPT OF MOTOR VEHICLE CH6 5TH FLR
Status REVISION 3
Designer KLS
CAD LM

Order Number
Workstations 97
Project Date 3/17/2017
Revised 5/22/2017 1:06:47 PM

Model Number	Fabric	Trim	Laminate	Quantity	Price	Extended
PANEL TRIM AND INTERSECTION CONDITIONS						
CI-FECPT-6680 VARIABLE HEIGHT T-POST	TBD	XX		12	$7.00	$84.00
CI-FWC FOUR WAY CAP		XX		10	$3.00	$30.00
CI-PSK PANEL STIFFENER KIT				57	$23.00	$1,311.00
CI-TWC TWO WAY CAP		XX		12	$2.00	$24.00
				423		*$6,781.00*
DOORS						
CI-DRL42L DOOR - LAMINATE LEFT		XX	TBD	4	$600.00	$2,400.00
CI-DRR42L DOOR - LAMINATE RIGHT		XX	TBD	1	$600.00	$600.00
CI-DRTH-42 42" DOOR THRESHOLD		XX		5	$0.00	$0.00
				10		*$3,000.00*
ELECTRICAL						
CI-T6CER-1 10-WIRE RECEPTACLE CIRCUIT #1		XX		87	$8.00	$696.00
CI-T6CER-2 10-WIRE RECEPTACLE CIRCUIT #2		XX		87	$8.00	$696.00
CI-T6CER-3 10-WIRE RECEPTACLE CIRCUIT #3		XX		87	$8.00	$696.00
CI-T6CER-4 10-WIRE RECEPTACLE CIRCUIT #4				87	$9.00	$783.00
CI-T6PJ-17 PANEL JUMPER 18" 622				253	$45.00	$11,385.00
CI-T6PJ-20 10-WIRE PNL-TO-PNL JUMPER 20"				29	$47.00	$1,363.00
CI-T6TF 10-WIRE TOP FEED		XX		28	$133.00	$3,724.00
GILE.24 GILE LED TASK LIGHT 24"				76	$80.00	$6,080.00
GILE.36 GILE LED TASK LIGHT 36"				107	$90.00	$9,630.00
GILE.INFEED GILE INFEED /W TRANSFORMER				183	$20.00	$3,660.00
				1024		*$38,713.00*
WORKSURFACES						
CI-ADA32-CT-36 36" CNTR TOP FOR ADA32 RQMNTS		XX	TBD	1	$118.00	$118.00
CI-CTA-36 STRAIGHT COUNTERTOP		XX	TBD	2	$110.00	$220.00
CI-WS-2048-LR RECTANGULAR WORKSRFCE 20 X 48		XX	TBD	1	$105.00	$105.00

Project 17DMV191
Description DEPT OF MOTOR VEHICLE CH6 5TH FLR
Status REVISION 3
Designer KLS
CAD LM

Order Number
Workstations 97
Project Date 3/17/2017
Revised 5/22/2017 1:06:47 PM

Model Number	Fabric	Trim	Laminate	Quantity	Price	Extended
WORKSURFACES						
CI-WS-2424-C RECTANGULAR WORKSRFCE 24 X 24		XX	TBD	1	$99.00	$99.00
CI-WS-2436-C RECTANGULAR WORKSRFCE 24 X 36		XX	TBD	55	$103.00	$5,665.00
CI-WS-2442-C RECTANGULAR WORKSRFCE 24 X 42		XX	TBD	10	$105.00	$1,050.00
CI-WS-2448-LR RECTANGULAR WORKSRFCE 24 X 48		XX	TBD	7	$107.00	$749.00
CI-WS-2460-LR RECTANGULAR WORKSRFCE 24 X 60		XX	TBD	98	$114.00	$11,172.00
CI-WS-2472-LR RECTANGULAR WORKSRFCE 24 X 72		XX	TBD	4	$127.00	$508.00
CI-WS90-2436-C 90 DEG. CORNER WORKSURFACE		XX	TBD	84	$118.00	$9,912.00
CI-WSB-L WORKSURFACE BRACKET-LEFT		XX		73	$13.00	$949.00
CI-WSB-R WORKSURFACE BRACKET-RIGHT		XX		77	$13.00	$1,001.00
CI-WSD90-3660L 90 DEG D-SHAPED WKSF.		XX	TBD	1	$230.00	$230.00
CI-WSD90-3660R 90 DEG D-SHAPED WKSF.		XX	TBD	4	$230.00	$920.00
CI-WSG WORKSURFACE GROMMET 3"		XX		5	$4.00	$20.00
CI-WSSPL-2029-L WORKSRFCE SUPRT PANEL 20 X 29		XX		1	$93.00	$93.00
CI-WSSPL-2429-L WORKSRFCE SUPRT PANEL 24 X 29		XX		1	$95.00	$95.00
				425		*$32,906.00*
ACCESSORIES						
31-13-0443-101 CORE & KEYS LOCK 101				8	$0.00	$0.00
31-13-0443-102 CORE & KEYS LOCK 102				3	$0.00	$0.00
31-13-0443-103 CORE & KEYS LOCK 103				3	$0.00	$0.00
31-13-0443-104 CORE & KEYS LOCK 104				3	$0.00	$0.00
31-13-0443-105 CORE & KEYS LOCK 105				6	$0.00	$0.00
31-13-0443-106 CORE & KEYS LOCK 106				4	$0.00	$0.00
31-13-0443-107 CORE & KEYS LOCK 107				4	$0.00	$0.00
31-13-0443-108 CORE & KEYS LOCK 108				4	$0.00	$0.00

Project 17DMV191
Description DEPT OF MOTOR VEHICLE CH6 5TH FLR
Status REVISION 3
Designer KLS
CAD LM

Order Number
Workstations 97
Project Date 3/17/2017
Revised 5/22/2017 1:06:47 PM

Model Number	*Fabric*	*Trim*	*Laminate*	*Quantity*	*Price*	*Extended*
ACCESSORIES						
31-13-0443-109 CORE & KEYS LOCK 109				5	$0.00	$0.00
31-13-0443-110 CORE & KEYS LOCK 110				4	$0.00	$0.00
31-13-0443-111 CORE & KEYS LOCK 111				4	$0.00	$0.00
31-13-0443-112 CORE & KEYS LOCK 112				4	$0.00	$0.00
31-13-0443-113 CORE & KEYS LOCK 113				4	$0.00	$0.00
31-13-0443-114 CORE & KEYS LOCK 114				4	$0.00	$0.00
31-13-0443-115 CORE & KEYS LOCK 115				4	$0.00	$0.00
31-13-0443-116 CORE & KEYS LOCK 116				4	$0.00	$0.00
31-13-0443-117 CORE & KEYS LOCK 117				4	$0.00	$0.00
31-13-0443-118 CORE & KEYS LOCK 118				4	$0.00	$0.00
31-13-0443-119 CORE & KEYS LOCK 119				4	$0.00	$0.00
31-13-0443-120 CORE & KEYS LOCK 120				4	$0.00	$0.00
31-13-0443-121 CORE & KEYS LOCK 121				4	$0.00	$0.00
31-13-0443-122 CORE & KEYS LOCK 122				4	$0.00	$0.00
31-13-0443-123 CORE & KEYS LOCK 123				4	$0.00	$0.00
31-13-0443-124 CORE & KEYS LOCK 124				4	$0.00	$0.00
31-13-0443-125 CORE & KEYS LOCK 125				4	$0.00	$0.00
31-13-0443-126 CORE & KEYS LOCK 126				4	$0.00	$0.00
31-13-0443-127 CORE & KEYS LOCK 127				4	$0.00	$0.00
31-13-0443-128 CORE & KEYS LOCK 128				4	$0.00	$0.00
31-13-0443-129 CORE & KEYS LOCK 129				4	$0.00	$0.00
31-13-0443-130 CORE & KEYS LOCK 130				4	$0.00	$0.00
31-13-0443-131 CORE & KEYS LOCK 131				4	$0.00	$0.00

Project 17DMV191
Description DEPT OF MOTOR VEHICLE CH6 5TH FLR
Status REVISION 3
Designer KLS
CAD LM

Order Number
Workstations 97
Project Date 3/17/2017
Revised 5/22/2017 1:06:47 PM

Model Number	*Fabric*	*Trim*	*Laminate*	*Quantity*	*Price*	*Extended*
ACCESSORIES						
31-13-0443-132 CORE & KEYS LOCK 132				4	$0.00	$0.00
31-13-0443-133 CORE & KEYS LOCK 133				1	$0.00	$0.00
31-13-0443-134 CORE & KEYS LOCK 134				3	$0.00	$0.00
31-13-0443-135 CORE & KEYS LOCK 135				4	$0.00	$0.00
31-13-0443-136 CORE & KEYS LOCK 136				4	$0.00	$0.00
31-13-0443-137 CORE & KEYS LOCK 137				4	$0.00	$0.00
31-13-0443-138 CORE & KEYS LOCK 138				4	$0.00	$0.00
31-13-0443-140 CORE & KEYS LOCK 140				4	$0.00	$0.00
31-13-0443-141 CORE & KEYS LOCK 141				4	$0.00	$0.00
31-13-0443-142 CORE & KEYS LOCK 142				4	$0.00	$0.00
31-13-0443-143 CORE & KEYS LOCK 143				4	$0.00	$0.00
31-13-0443-144 CORE & KEYS LOCK 144				4	$0.00	$0.00
31-13-0443-145 CORE & KEYS LOCK 145				4	$0.00	$0.00
31-13-0443-146 CORE & KEYS LOCK 146				4	$0.00	$0.00
31-13-0443-147 CORE & KEYS LOCK 147				4	$0.00	$0.00
31-13-0443-148 CORE & KEYS LOCK 148				4	$0.00	$0.00
31-13-0443-149 CORE & KEYS LOCK 149				4	$0.00	$0.00
31-13-0443-150 CORE & KEYS LOCK 150				4	$0.00	$0.00
31-13-0443-151 CORE & KEYS LOCK 151				4	$0.00	$0.00
31-13-0443-152 CORE & KEYS LOCK 152				4	$0.00	$0.00
31-13-0443-153 CORE & KEYS LOCK 153				4	$0.00	$0.00
31-13-0443-154 CORE & KEYS LOCK 154				4	$0.00	$0.00
31-13-0443-155 CORE & KEYS LOCK 155				4	$0.00	$0.00

Project 17DMV191
Description DEPT OF MOTOR VEHICLE CH6 5TH FLR
Status REVISION 3
Designer KLS
CAD LM

Order Number
Workstations 97
Project Date 3/17/2017
Revised 5/22/2017 1:06:47 PM

Model Number	*Fabric*	*Trim*	*Laminate*	*Quantity*	*Price*	*Extended*
ACCESSORIES						
31-13-0443-156 CORE & KEYS LOCK 156				4	$0.00	$0.00
31-13-0443-157 CORE & KEYS LOCK 157				4	$0.00	$0.00
31-13-0443-158 CORE & KEYS LOCK 158				4	$0.00	$0.00
31-13-0443-159 CORE & KEYS LOCK 159				4	$0.00	$0.00
31-13-0443-160 CORE & KEYS LOCK 160				4	$0.00	$0.00
31-13-0443-161 CORE & KEYS LOCK 161				4	$0.00	$0.00
31-13-0443-162 CORE & KEYS LOCK 162				4	$0.00	$0.00
31-13-0443-163 CORE & KEYS LOCK 163				4	$0.00	$0.00
31-13-0443-164 CORE & KEYS LOCK 164				4	$0.00	$0.00
31-13-0443-165 CORE & KEYS LOCK 165				4	$0.00	$0.00
31-13-0443-166 CORE & KEYS LOCK 166				4	$0.00	$0.00
31-13-0443-167 CORE & KEYS LOCK 167				4	$0.00	$0.00
31-13-0443-168 CORE & KEYS LOCK 168				4	$0.00	$0.00
31-13-0443-169 CORE & KEYS LOCK 169				4	$0.00	$0.00
31-13-0443-170 CORE & KEYS LOCK 170				4	$0.00	$0.00
31-13-0443-171 CORE & KEYS LOCK 171				4	$0.00	$0.00
31-13-0443-172 CORE & KEYS LOCK 172				4	$0.00	$0.00
31-13-0443-173 CORE & KEYS LOCK 173				4	$0.00	$0.00
31-13-0443-174 CORE & KEYS LOCK 174				4	$0.00	$0.00
31-13-0443-175 CORE & KEYS LOCK 175				4	$0.00	$0.00
31-13-0443-176 CORE & KEYS LOCK 176				4	$0.00	$0.00
31-13-0443-177 CORE & KEYS LOCK 177				4	$0.00	$0.00
31-13-0443-178 CORE & KEYS LOCK 178				4	$0.00	$0.00

Project 17DMV191
Description DEPT OF MOTOR VEHICLE CH6 5TH FLR
Status REVISION 3
Designer KLS
CAD LM

Order Number
Workstations 97
Project Date 3/17/2017
Revised 5/22/2017 1:06:47 PM

Model Number	*Fabric*	*Trim*	*Laminate*	*Quantity*	*Price*	*Extended*
ACCESSORIES						
31-13-0443-179 CORE & KEYS LOCK 179				4	$0.00	$0.00
31-13-0443-180 CORE & KEYS LOCK 180				4	$0.00	$0.00
31-13-0443-181 CORE & KEYS LOCK 181				4	$0.00	$0.00
31-13-0443-182 CORE & KEYS LOCK 182				4	$0.00	$0.00
31-13-0443-183 CORE & KEYS LOCK 183				4	$0.00	$0.00
31-13-0443-184 CORE & KEYS LOCK 184				4	$0.00	$0.00
31-13-0443-185 CORE & KEYS LOCK 185				4	$0.00	$0.00
31-13-0443-186 CORE & KEYS LOCK 186				4	$0.00	$0.00
31-13-0443-187 CORE & KEYS LOCK 187				4	$0.00	$0.00
31-13-0443-188 CORE & KEYS LOCK 188				4	$0.00	$0.00
31-13-0443-189 CORE & KEYS LOCK 189				4	$0.00	$0.00
31-13-0443-190 CORE & KEYS LOCK 190				4	$0.00	$0.00
31-13-0443-191 CORE & KEYS LOCK 191				5	$0.00	$0.00
31-13-0443-192 CORE & KEYS LOCK 192				4	$0.00	$0.00
31-13-0443-193 CORE & KEYS LOCK 193				5	$0.00	$0.00
31-13-0443-194 CORE & KEYS LOCK 194				5	$0.00	$0.00
31-13-0443-197 CORE & KEYS LOCK 197				5	$0.00	$0.00
31-13-0443-198 CORE & KEYS LOCK 198				5	$0.00	$0.00
31-13-0443-199 CORE & KEYS LOCK 199				5	$0.00	$0.00
CI-CH COAT HOOK - SINGLE		XX		180	$3.00	$540.00
CI-JCD CENTER DRAWER		XX		90	$50.00	$4,500.00
CI-KBM KEYBOARD W/MOUSE TRAY (BLACK)				95	$171.00	$16,245.00
CI-TB-2416 TACKBOARD 24 X 16	TBD			1	$43.00	$43.00

Project 17DMV191
Description DEPT OF MOTOR VEHICLE CH6 5TH FLR
Status REVISION 3
Designer KLS
CAD LM

Order Number
Workstations 97
Project Date 3/17/2017
Revised 5/22/2017 1:06:47 PM

Model Number	Fabric	Trim	Laminate	Quantity	Price	Extended
ACCESSORIES						
CI-TB-3612 TACKBOARD 36 X 12	TBD			3	$47.00	$141.00
CI-TB-3616 TACKBOARD 36 X 16	TBD			63	$58.00	$3,654.00
CI-TB-4216 TACKBOARD 42 X 16	TBD			10	$62.00	$620.00
CI-TB-4812 TACKBOARD 48 X 12	TBD			1	$50.00	$50.00
CI-TB-4816 TACKBOARD 48 X 16	TBD			7	$64.00	$448.00
CI-TB-6012 TACKBOARD 60 X 12	TBD			9	$62.00	$558.00
CI-TB-6016 TACKBOARD 60 X 16	TBD			89	$76.00	$6,764.00
				938		*$33,563.00*
OVERHEAD STORAGE COMPONENTS						
NSD SHELF DIVIDER		XX		364	$10.00	$3,640.00
				364		*$3,640.00*
FILING & STORAGE						
CI-DD-12 DRAWER DIVIDR FILE DRWR				289	$9.00	$2,601.00
CI-DD-6 DRAWER DIVIDR FILE DRWR				190	$7.00	$1,330.00
CIK3061524HD3DFLL 30X24 KIOSK W/HINGED DOORS		XX		1	$1,030.00	$1,030.00
CIP-1524M-BBF 24" MOBILE PED BOX/BOX/FILE		XX		95	$308.00	$29,260.00
CIP-1524M-FF 24" MOBILE PED FILE/FILE		XX		97	$250.00	$24,250.00
CI-PT PENCIL TRAY-(BLACK)				95	$7.00	$665.00
				767		*$59,136.00*
TABLES						
P255F-54B PORTICO,30X60",FXD LEG,RECT,T		XX	TBD	1	$325.00	$325.00
PR35FX-54B PORTICO,42"DIA.,FXD LEG,ROUND,		XX	TBD	1	$395.00	$395.00
				2		*$720.00*
DESKS AND WORKSURFACES						
VOLED3072FS3L EXECUTIVE DESK - VOLITION		XX	TBD	1	$495.00	$495.00
VOLR2430PS3L RECT WORKSURFACE, 24X30, STD L		XX	TBD	1	$410.00	$410.00

Project 17DMV191
Description DEPT OF MOTOR VEHICLE CH6 5TH FLR
Status REVISION 3
Designer KLS
CAD LM

Order Number
Workstations 97
Project Date 3/17/2017
Revised 5/22/2017 1:06:47 PM

Model Number	Fabric	Trim	Laminate	Quantity	Price	Extended
DESKS AND WORKSURFACES						
VOLR2472PS3L RECT. WORKSURFACE - VOLITION		XX	TBD	1	$479.00	$479.00
WBW2430-BN/9WWB 24X30 BASIC WORKSURFACE		XX	TBD	6	$228.00	$1,368.00
WBW2460-BN/9WWS 24X60 BASIC WORKSURFACE		XX	TBD	1	$277.00	$277.00
WBW2472-BN/9WWS 24X72 BASIC WORKSURFACE		XX	TBD	5	$296.00	$1,480.00
WZPP244872BNL9WWB PIANO PENINSULA WORKSURFACE		XX	TBD	4	$510.00	$2,040.00
WZPP244872BNR9WWB PIANO PENINSULA WORKSURFACE		XX	TBD	2	$510.00	$1,020.00
				21		*$7,569.00*
OVERHEADS/STORAGE						
CI-OCS-36 36" OVERHEAD CORNER SHELF		XX	TBD	79	$125.00	$9,875.00
PRDS24/X1/PM 24" STEEL OVERHEAD-PANEL MOUNT		XX		1	$207.00	$207.00
PRDS36/X1/PM 36" STEEL OVERHEAD-PANEL MOUNT		XX		7	$234.00	$1,638.00
PRDS42/X1/PM 42" STEEL OVERHEAD-PANEL MOUNT		XX		1	$243.00	$243.00
PRDS48/X1/PM 48" STEEL OVERHEAD-PANEL MOUNT		XX		5	$268.00	$1,340.00
PRDS60/X1/PM 60" STEEL OVERHEAD-PANEL MOUNT		XX		79	$293.00	$23,147.00
ULSR48/X1/PM 48" LOW SHELF		XX		1	$130.00	$130.00
URSR36/X1/PM 36" REGULAR SHELF		XX		61	$123.00	$7,503.00
URSR42/X1/PM 42" REGULAR SHELF		XX		9	$126.00	$1,134.00
URSR48/X1/PM 48" REGULAR SHELF		XX		1	$133.00	$133.00
URSR60/X1/PM 60" REGULAR SHELF		XX		10	$153.00	$1,530.00
VNOL30/VL VENUS VOLITION - LAM		XX	TBD	1	$350.00	$350.00
WZUS60 UNIVERSAL OVERHEAD - STEEL		XX		1	$405.00	$405.00
WZUS72 UNIVERSAL OVERHEAD - STEEL		XX		5	$596.00	$2,980.00
				261		*$50,615.00*
PRIVACY SCREENS						
VOLSBS1930UF BETWEEN STANCHION SCREEN - UPH	TBD	XX		1	$171.00	$171.00

Project	17DMV191	***Order Number***	
Description	DEPT OF MOTOR VEHICLE CH6 5TH FLR		
Status	REVISION 3	***Workstations***	97
Designer	KLS	***Project Date***	3/17/2017
CAD	LM	***Revised***	5/22/2017 1:06:47 PM

Model Number	***Fabric***	***Trim***	***Laminate***	***Quantity***	***Price***	***Extended***
PRIVACY SCREENS						
WZP60 60X19 PRIVACY SCREEN	TBD	XX		1	$187.00	$187.00
WZP72 72X19 PRIVACY SCREEN	TBD	XX		5	$198.00	$990.00
				7		*$1,348.00*
						$410,644.00

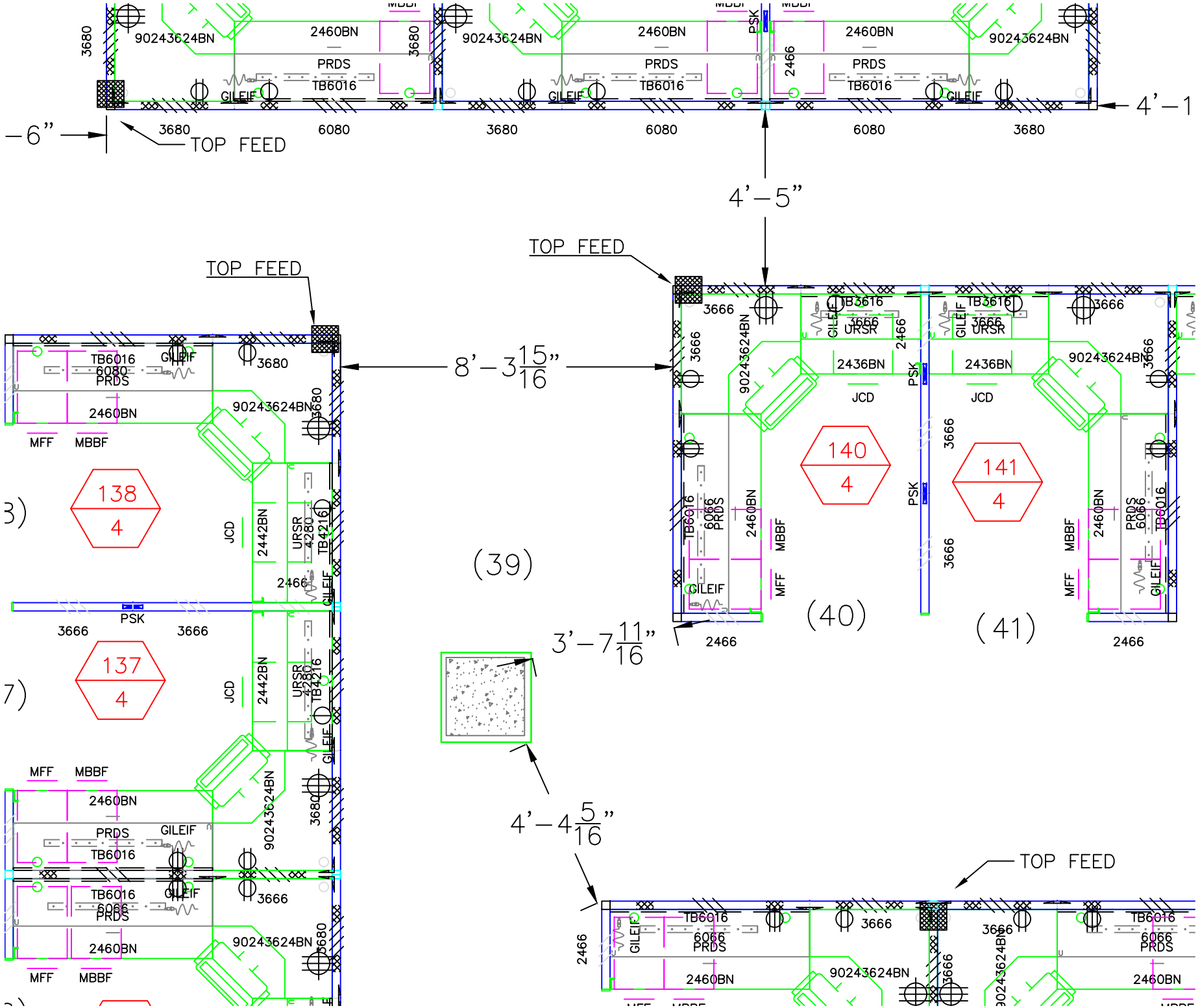

90243624BN
2460BN
PRDS
TB6016
GILEIF
3680
6080
PSK
2466
4'-1
-6"
TOP FEED
4'-5"
8'-3 15/16"
3'-7 11/16"
4'-4 5/16"
138
4
137
4
140
4
141
4
(39)
(40)
(41)
MFF
MBBF
JCD
2442BN
URSR
4280
TB4216
TB3616
3666
2436BN

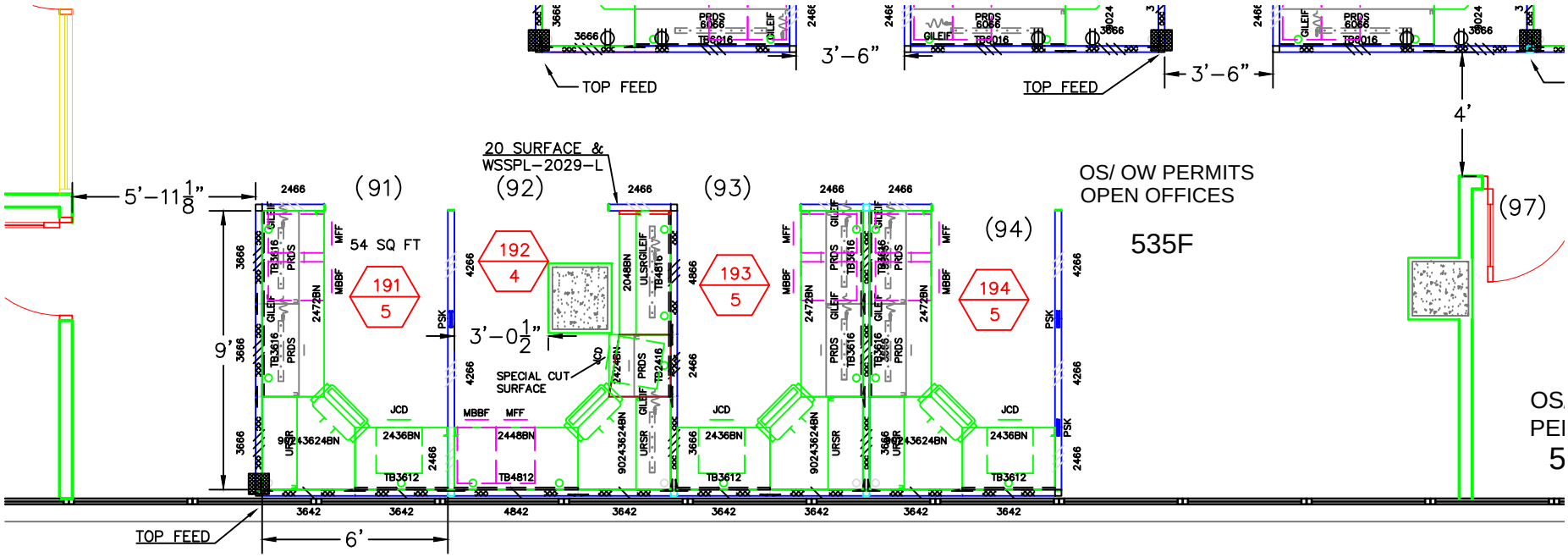

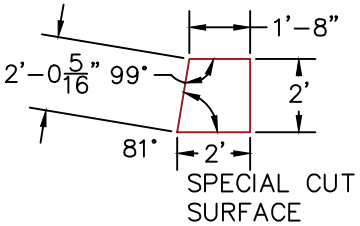

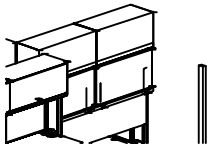

OS/ OW PERMITS
OPEN OFFICES
535E

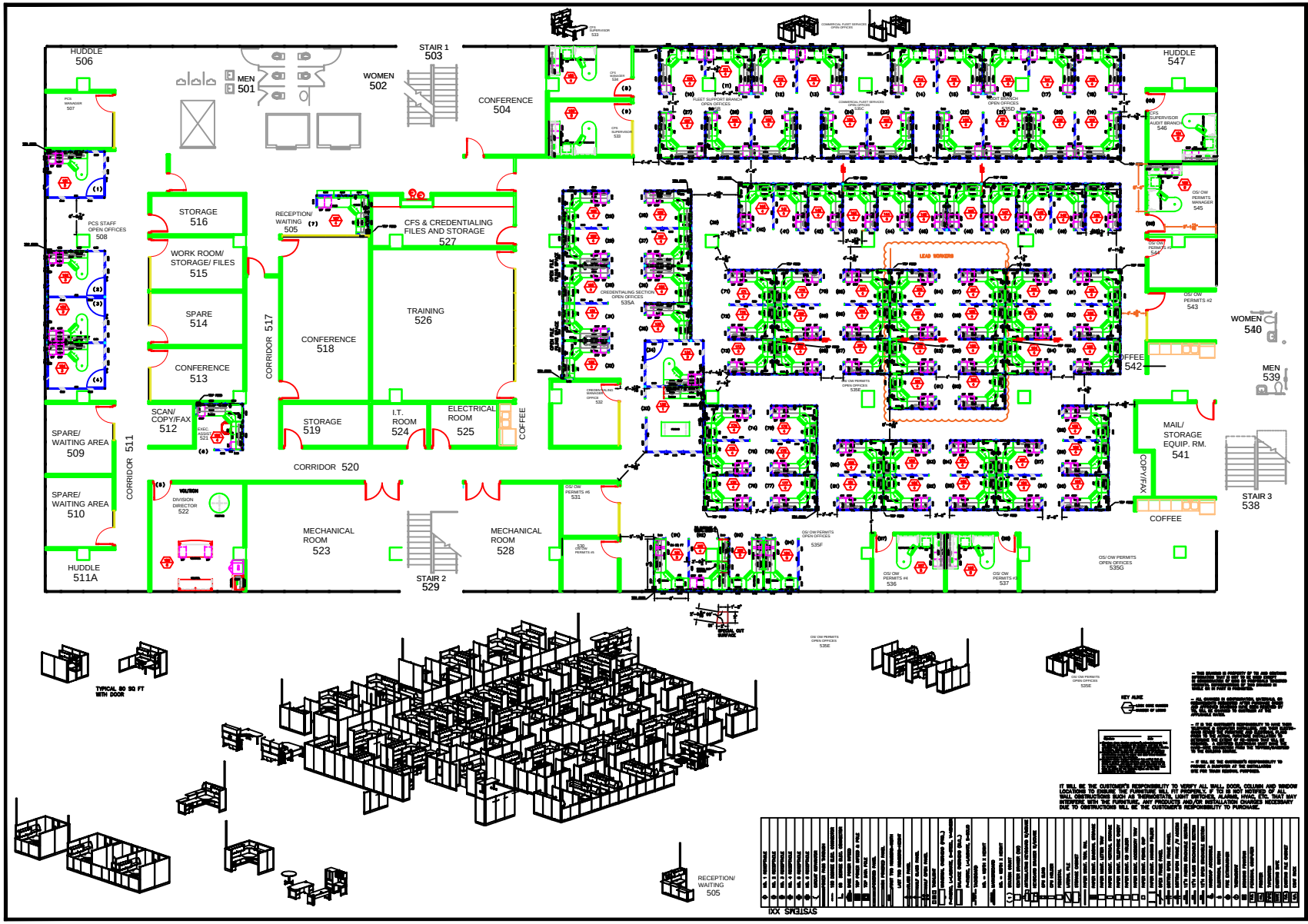

IT WILL BE THE CUSTOMER'S RESPONSIBILITY TO VERIFY ALL WALL DOOR, COLUMN AND WINDOW LOCATIONS TO ENSURE THE FURNITURE WILL FIT PROPERLY. IF NOT IS NOT REFRESH OF ALL WALL OBSTRUCTIONS SUCH AS THERMOSTATS, LIGHT SWITCHES, ALARMS, HVAC, ETC. THAT MAY INTERFERE WITH THE FURNITURE. ANY PRODUCTS AND/OR INSTALLATION CHARGES NECESSARY DUE TO OBSTRUCTIONS WILL BE THE CUSTOMER'S REPORT RESPONSIBILITY TO PURCHASE.

DRAWING: FLOOR PLAN

SCALE: 1/8" = 1'-0"

SHEET NO: 1 OF 1

DATE: 3/20/2017

PROJECT NO: 17DMV191

PROJECT: TX DEPT OF MOTOR VEHICLE
CAMP HUBBARD, BLDG 8, 5TH FLR, AUSTIN

CONTACT: ANN PEIRCE

Phone: 512-465-4100
Fax:

All concepts, designs, &/or plans (including product descriptive information) represented by this drawing are the sole property of TCI. This work may not be reproduced or this document without written permission is strictly prohibited.

DESIGNER: L MITZE

Checked By:

Approved By:

REVISIONS:

No.	Date	Remarks
1	5/8/2017	REVISED PER E-MAIL
2	5/17/2017	REVISED PER E-MAIL
3	5/22/2017	REVISED PER E-MAIL

TCI Modular Furniture
P.O. Box 4013
Huntsville, TX 77342-4013
PH: 936.293.4116
FX: 936.293.4126